HSF

NOTES:
Current Rating: 3.0AMP
Contact Resistance: 20mΩ Max
Withstand Voltage: 1000V AC/DC
Insulation Resistance: 1000MΩ Min
Operation Temperature: −40℃ to +105℃

Contact Material:Phosphor Bronze
Contact plating:Au Or Sn over Ni
Insulator Material:PA9T+30%G.F UL94V−0

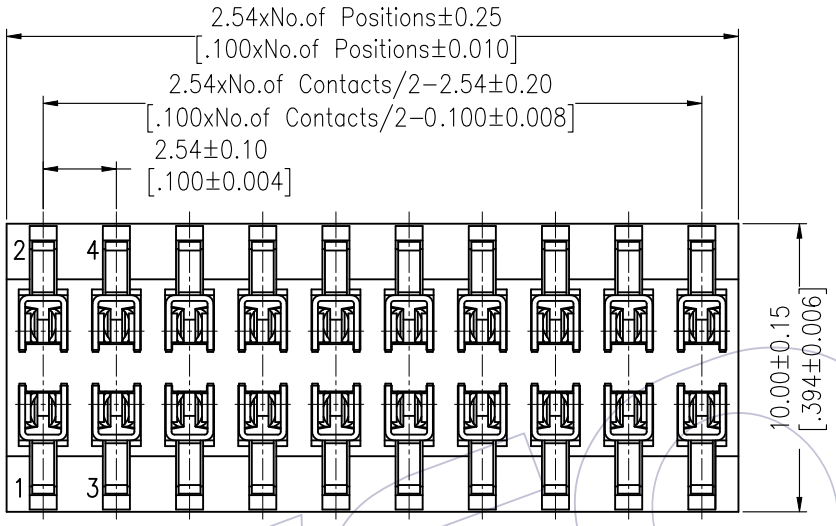

Recommended P.C.B Layout(Top Side)
(PCB BOARD TOLERANCE±0.05)

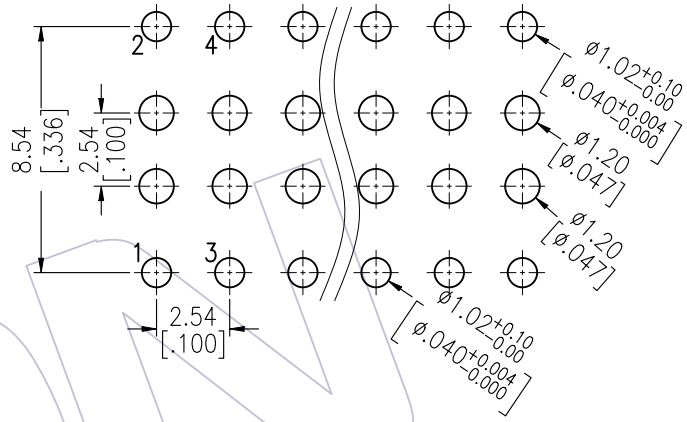

Ordering Information

2150T - 2 XX W XX CUN X 1

- XX: No.of Pins per ROW:02~40PIN
- XX: Contact Plating:
  - G0=Gold Flash
  - G3=10μ"Gold
  - G4=15μ"Gold
  - G5=30μ"Gold
  - S0=Gold Flash/Tin
  - S3=10μ"Gold/Tin
  - S4=15μ"Gold/Tin
  - S5=30μ"Gold/Tin
  - SN=Tin
  - SM=Matte Tin
- X: Packing: T=Tube

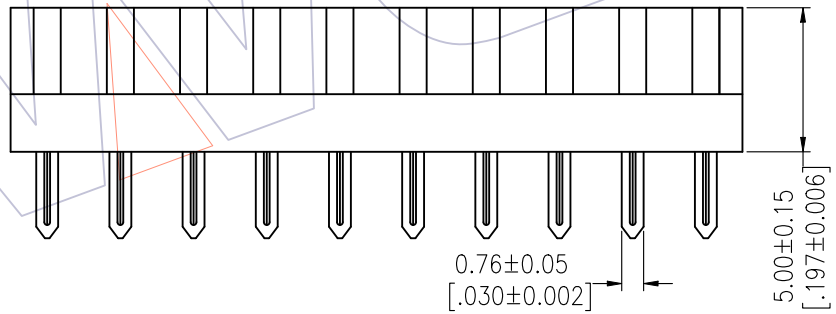

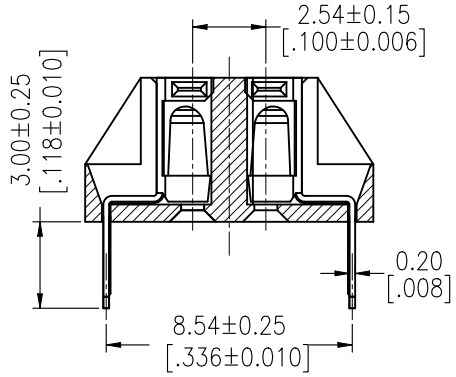

Item	Pitch	Mating
Standard	2.54	1115/1120/1125
Alternate		

REV	DATE	MODIFICATION DESCRIPTION	CHANGE
A0	2012/08/06	NEW	------

OPERATION	
X.X	±0.40
X.XX	±0.25
X.XXX	±0.15
Angle	± 3°
DIM	TOL

DRAW	JYHuang	DATE	2012/08/06
CHECK		DATE	
APPROVE		DATE	

SCALE	FIT
UNIT	mm
SIZE	A4
SHEET	1/1
PROJ.	

PART NO. 2150T-2XXWXXCUNX1

TITLE: FH2.54 Double Row Centipede Feet H=5.0 Top Enter

Customer NO.

WCON
Http: www.wcon.com

WCON−Dongguan
Tel: +86 769 85358920
Fax: +86 769 85358915
E-mail: sales@wcon.com

WCON−Kunshan
Tel: +86 512 57468408
Fax: +86 512 57468468
E-mail: salesks@wcon.com