HSF

NOTES:
Current Rating: 8A
Voltage Rating: 300V
Contact Resistance: 20milliohm Max
Withstand Voltage: AC2500V
Insulation Resistance: 1000Megohm Min
Screw Torque: 3 lbf.in
Wire range: 16-30AWG
Operation Temperature: -40℃ to +105℃

Housing Material: PA66 UL94V-0
Cover Material: PA66 UL94-V0
Screw: Steel
Pin Block: Brass
Contact: Phosphor Bronze

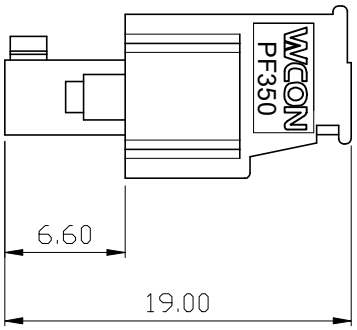

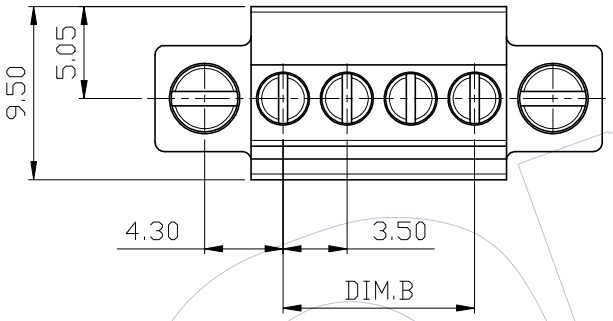

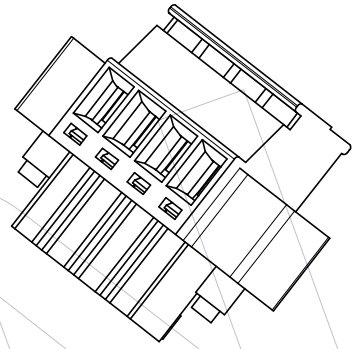

Ordering Information:

P F 350 - A XX A SM W 1

- F=Female
- Picth 350=3.50
- No.of Pins 02-24P
- Color A=Green
- Contact Plated SM=Matte Tin
- W=With Two Side Screw

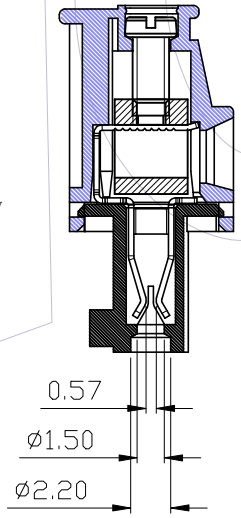

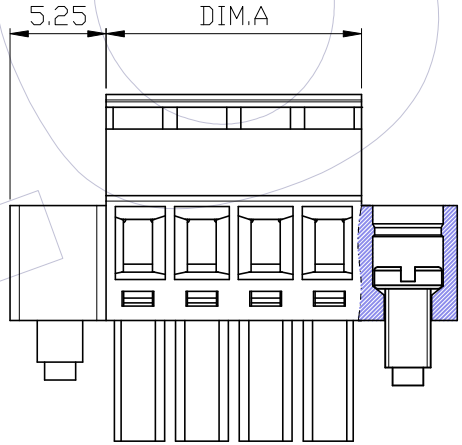

位数	DIM. A	DIM. B
24P	84.00±0.30	80.50±0.30
23P	80.50±0.30	77.00±0.30
22P	77.00±0.30	73.50±0.30
21P	73.50±0.30	70.00±0.30
20P	70.00±0.30	66.50±0.30
19P	66.50±0.30	63.00±0.30
18P	63.00±0.30	59.50±0.30
17P	59.50±0.30	56.00±0.30
16P	56.00±0.30	52.50±0.30
15P	52.50±0.30	49.00±0.30
14P	49.00±0.20	45.50±0.20
13P	45.50±0.20	42.00±0.20
12P	42.00±0.20	38.50±0.20
11P	38.50±0.20	35.00±0.20
10P	35.00±0.20	31.50±0.20
9P	31.50±0.20	28.00±0.20
8P	28.00±0.15	24.50±0.15
7P	24.50±0.15	21.00±0.15
6P	21.00±0.15	17.50±0.15
5P	17.50±0.15	14.00±0.15
4P	14.00±0.15	10.50±0.15
3P	10.50±0.15	7.00 ±0.15
2P	7.00 ±0.15	3.50 ±0.10

REV	DATE	MODIFICATION DESCRIPTION	CHANGE
A0	2019/01/07	NEW	——

OPERATION	
X.X	±0.40
X.XX	±0.25
X.XXX	±0.15
Angle	± 3°
DIM	TOL

DRAW	Brace	DATE	2019/01/07
CHECK		DATE	
APPROVE		DATE	

SCALE	FIT
UNIT	mm / inch
SIZE	A4
SHEET	1/2
PROJ.	

PART NO. PF350-AXXASMW1

TITLE: 3.50mm Pitch Female Pluggable Terminal Blocks

Customer NO.

WCON
Http: www.wcon.com

WCON-Dongguan
Tel: +86 769 85358920
Fax: +86 769 85358915
E-mail: sales@wcon.com

WCON-Kunshan
Tel: +86 512 57468408
Fax: +86 512 57468468
E-mail: salesks@wcon.com