HSF

IDC HOUSING MATERIAL
Insulation Material:PBT+30%GF(UL94V-0)
Contact Material:Phosphor Bronze
Contact plating:Au or Sn Over Ni

SPECIFICATIONS
Insulation Resistance:5MΩ Min
Contact Resistance:1.0Ω Max
Withstand Voltage:DC 300V, 10S
The Cable Assembly Must 100% Test

CABLE MATERIAL
Insulation:UL 2678,Grey Red Side
Conductor:30AWG(7/0.102mm)
Electrical:300V

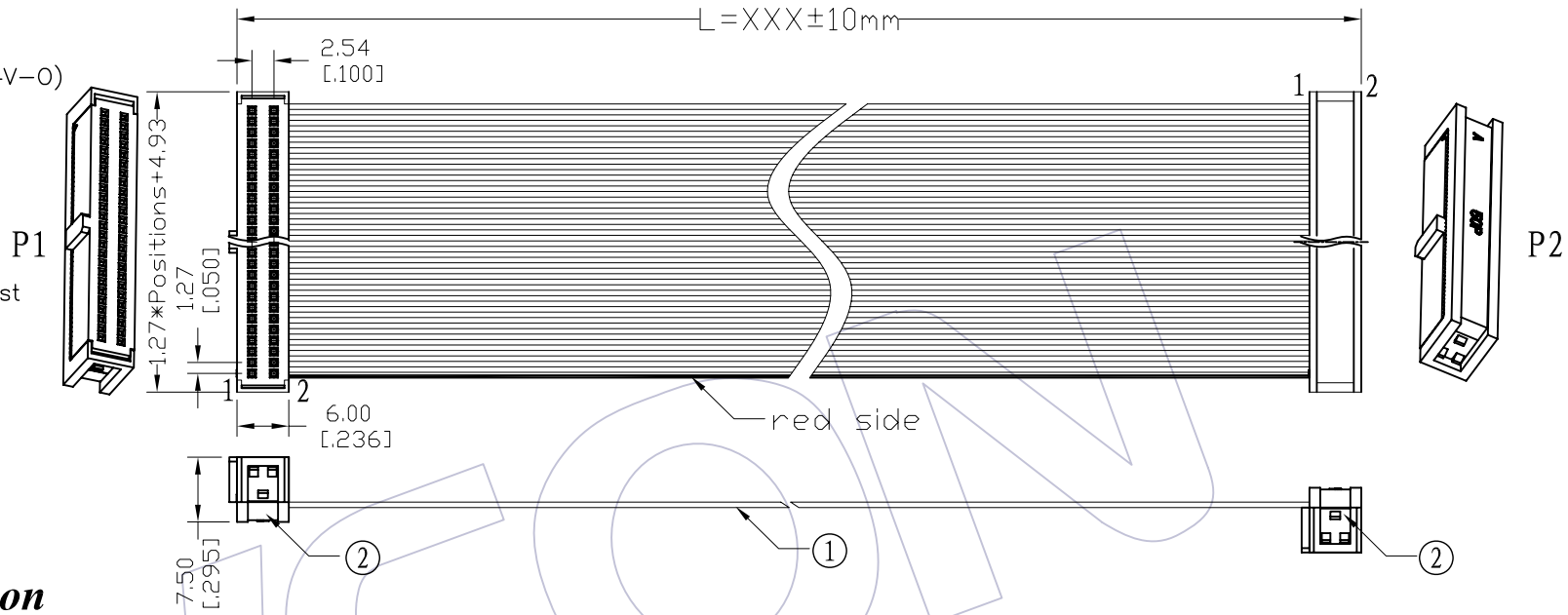

Ordering Information

FA42 - xx xx B B B xxx - 01

- No.OF Pins: 06~100p
- Contact Plating:
  - G0=Gold Flash
  - G3=10u"Gold
  - G4=15u"Gold
  - G5=30u"Gold
  - S0=Gold Flash/Ni
  - S3=10u"Gold/Ni
  - S4=15u"Gold/Ni
  - S5=30u"Gold/Ni
  - SN=Tin
- Connector Direction: B=Opposite Direction
- Connector Color: B=Black
- Length of Line(mm)

CONNECT METHOD

P1	P2
1	XX
2	XX
3	XX
4	XX
XX	2
XX	1

NO.	PART NO.	NAME	TITLE	QT'Y	UNIT
②	5242-XXYPXXBW01	CONN.	1.27*2.54 IDC **P PBT Black With Bump Phosphor Bronze Plating Xu" gold	2	SET
①	F3U-A30GXXD0-XXXX-1	WIRE	UL2678 PH0.635mm XXP 30AWG(7/0.102TC) PVC Grey Marking Red Side	XXXX	MM

REV	DATE	MODIFICATION DESCRIPTION	CHANGE	APPROVE
A0	09/08/17	NEW	———	———

OPERATION				
X.X	±0.40	DRAW	BEN	09/08/17
X.XX	±0.25	DESIGN		
X.XXX	±0.15	CHECK		
Angle	± 3°	APPROVE		
DIM	TOL			

SCALE	1:1
UNIT	mm
SIZE	A4
SHEET	1/1
PROJ.	

WCON 维峰五金电子有限公司
WAFE HARDWARE ELECTRONICS CO.LTD

PART NO.	FA42 -xxxxBBBxxx- 01
TITLE:	1.27*2.54 IDC Drawing
Customer NO.	